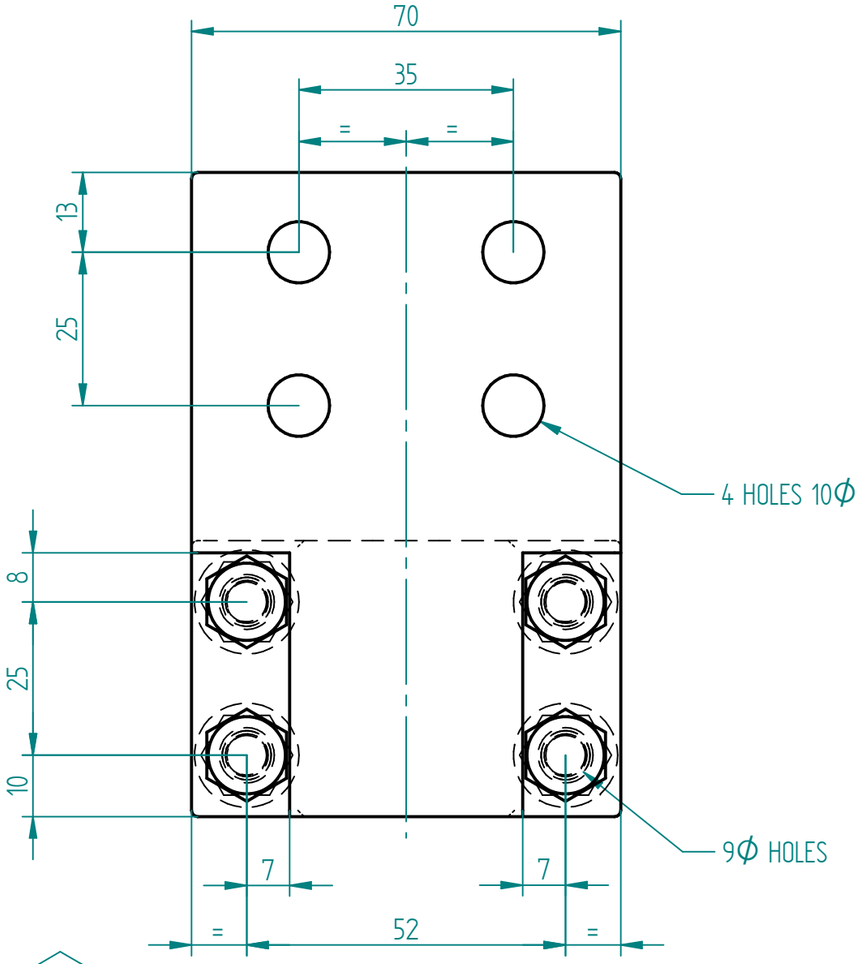

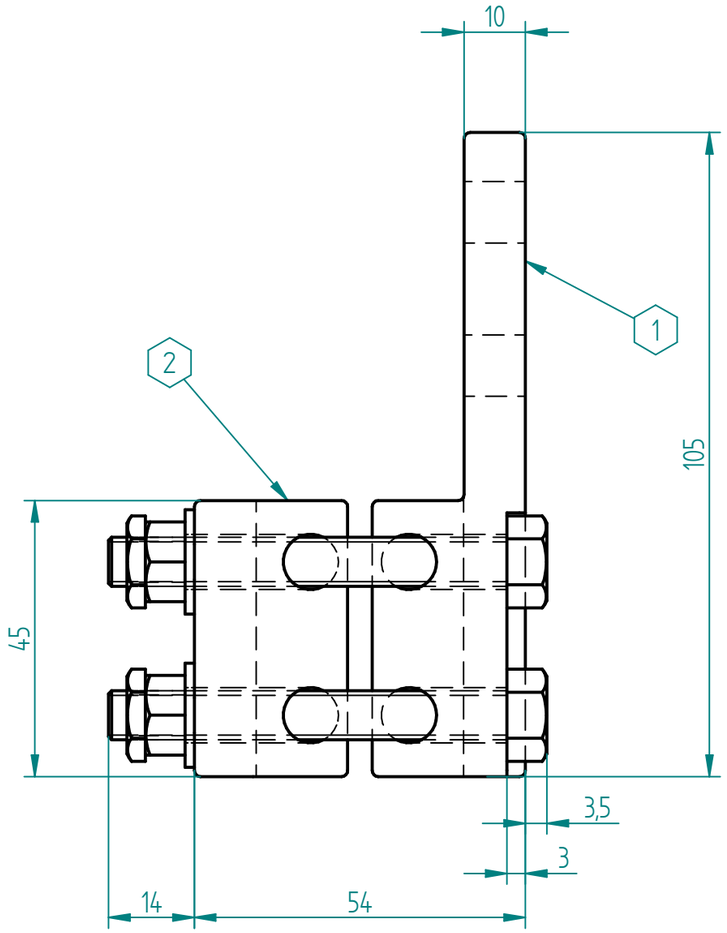

NOTES
MATERIAL :- BRASS STAMPING / EXTRUSION
FINISH :- ELECTRO TINNED

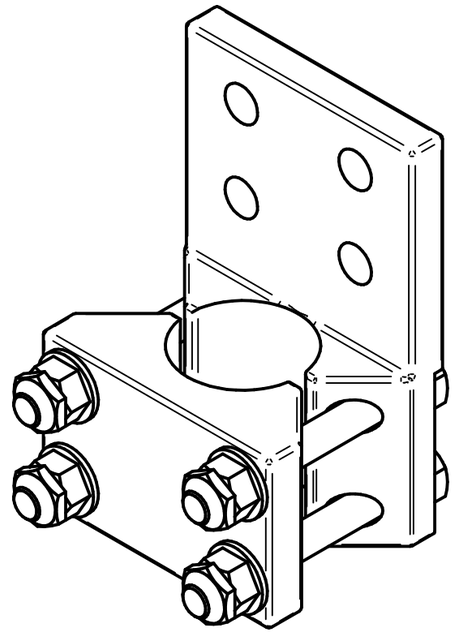

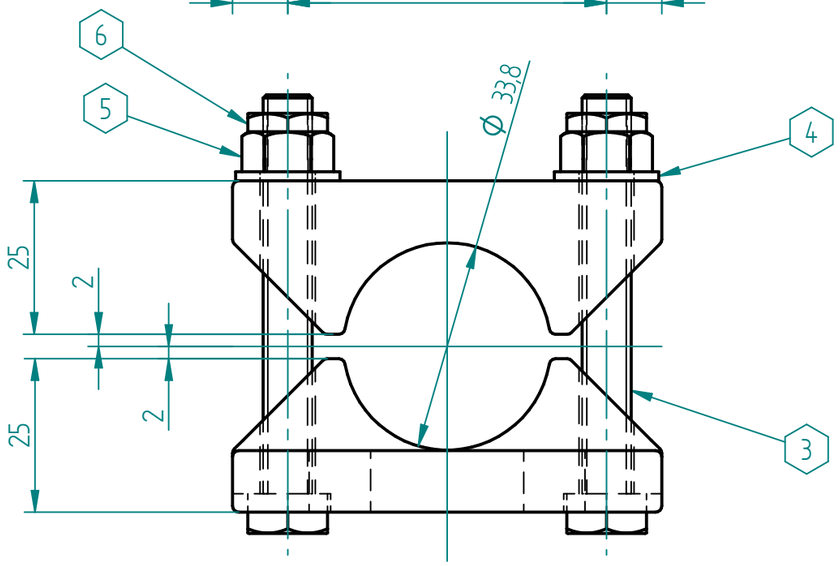

Item No	Part No	Quantity	Desription	Material
1	BLK0012-1	1	Block connector	Brass
2	BLK0012-2	1	Block connector	Brass
3	M8 X 65	4	Setscrew	Zinc plated
4	M8 P/W	4	Plain washer	Zinc plated
5	M8 F/N	4	Full nut	Zinc plated
6	M8 L/N	4	Lock nut	Zinc plated

	NAME	DATE
DRAWN	DSF	12/11/2025
ENG APPR		

UNLESS OTHERWISE SPECIFIED
DIMENSIONS ARE IN MILLIMETERS

BTRAC LTD
BRITISH TRANSFORMER COMPONENTS

TITLE M4 TERMINAL CONNECTOR FOR 300mm CABLES

REVISION NOTES

TOLERANCES UNLESS OTHERWISE STATED
UN-MACHINED CASTINGS +-2
UN-MACHINED STAMPINGS +-1
CUT-OFF LENGTHS +-1
MACHINED DIMENSIONS +-0.2
FABRICATION DIMENSIONS +-3

SIZE	DWG NO	REV
A3	BLK0025	0

FILE NAME: BLK0025.dft

SCALE: 1:1 | WEIGHT: TBA