NO PART OF THIS DRAWING MAY BE REPRODUCED OR TRANSMITTED IN ANY FORM OR BY ANY MEANS, ELECTRONIC OR MECHANICAL, INCLUDING PHOTOCOPYING, RECORDING, OR ANY INFORMATION STORAGE OR RETRIEVAL SYSTEM WITHOUT THE PRIOR PERMISSION OF W LUCY & CO., LTD

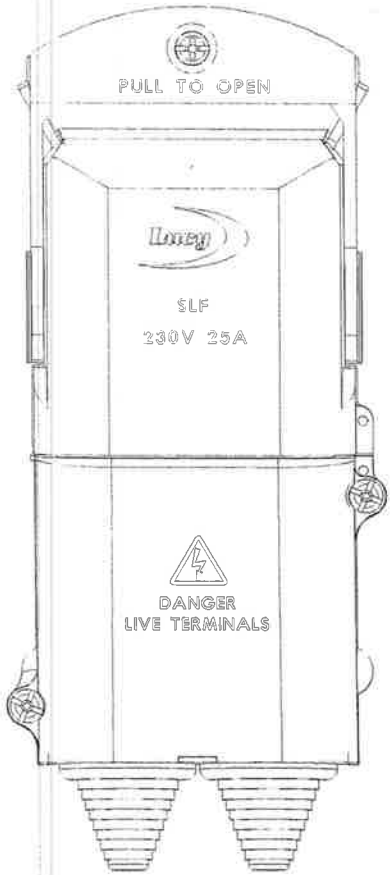

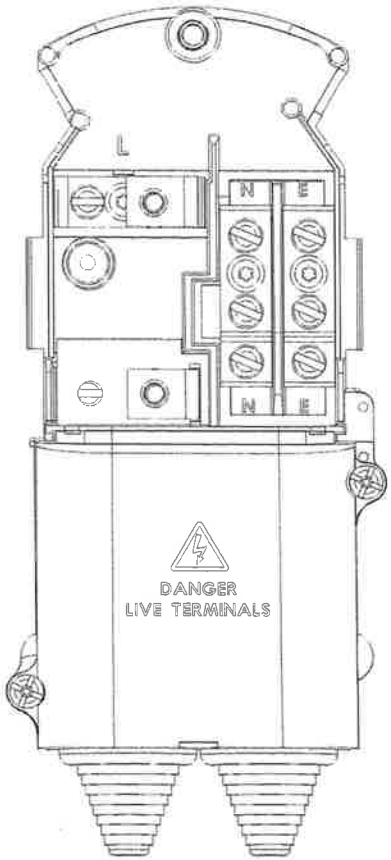

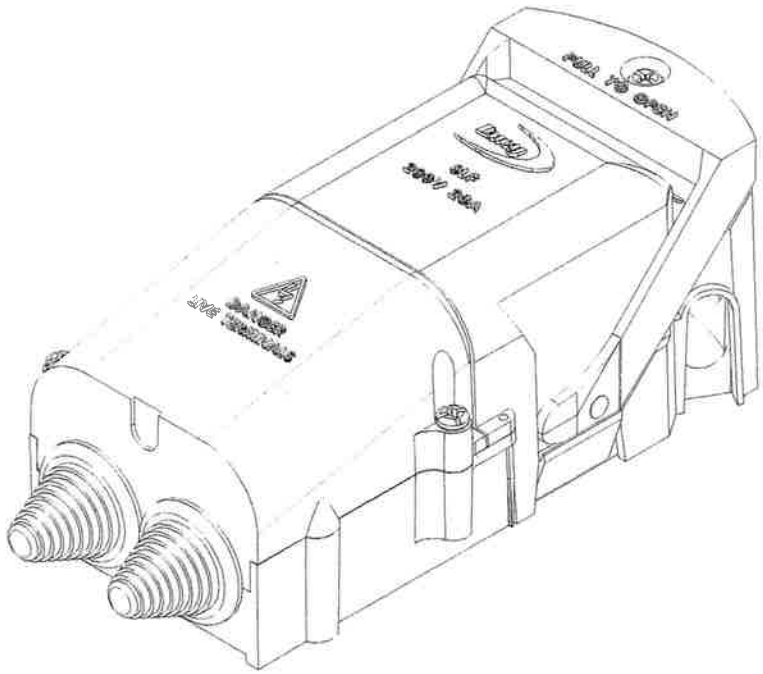

MOD.	NPB	ECR/ECN 812.UP DATED MODEL STRUCTURE & BOM	
APPRV.	SWH		
DATE	13/05/04		
STANDARD TOLERANCES: ISO 2768 m FOR ADDITIONAL INFO. SEE DRG. 72218		© COPYRIGHT W.LUCY & CO. LTD. ALL RIGHTS RESERVED.	ALL DIMENSIONS IN MILLIMETERS UNLESS OTHERWISE STATED
DRAWN	SWH	SLF 25A RATED STREET LIGHTING CUT-OUT TYPE 1 (SNE) SEPERATE NEUTRAL & EARTH	
APPRV.	SWH		
DATE	15/03/04		
ORD.No		CUST.	0250009009 ISS. 2

MATERIAL: | FINISH: | DO NOT SCALE IF IN DOUBT ASK | PROJECTION 1st ANGLE

0250009009 | ISS. 2 | PRINT STATUS

NO PART OF THIS DRAWING MAY BE REPRODUCED OR TRANSMITTED IN ANY FORM OR BY ANY MEANS, ELECTRONIC OR MECHANICAL, INCLUDING PHOTOCOPYING, RECORDING, OR ANY INFORMATION STORAGE OR RETRIEVAL SYSTEM WITHOUT THE PRIOR PERMISSION OF W LUCY & CO., LTD

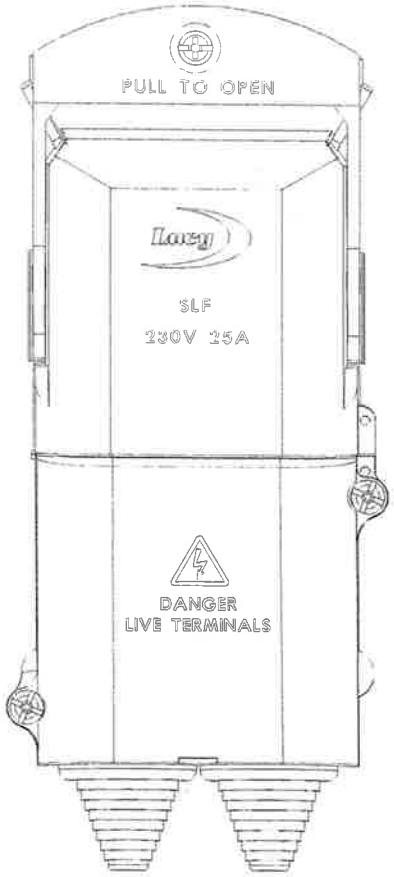

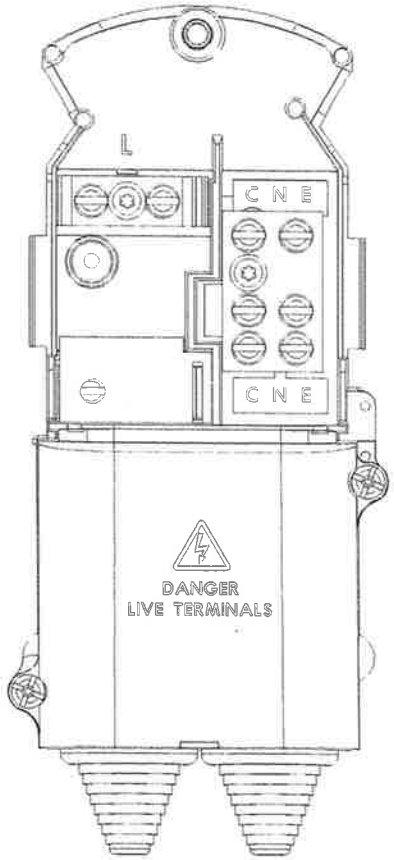

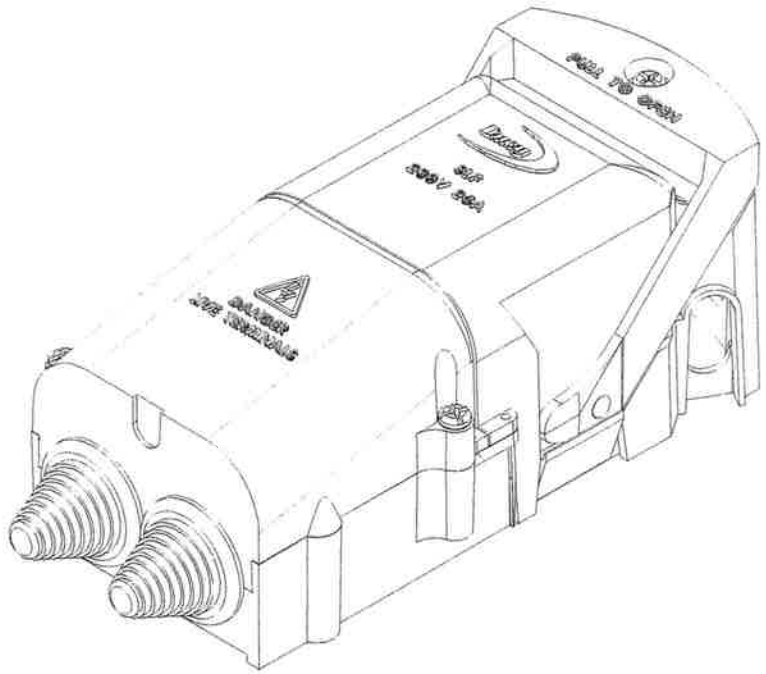

MOD.	NPB	ECR/ECN 812.UP DATED MODEL STRUCTURE & BOM	
APPRV.	SWH		
DATE	11/04/04		
STANDARD TOLERANCES: ISO 2768-m FOR ADDITIONAL INFO. SEE DRG. 72219		© COPYRIGHT W.LUCY & CO. LTD. ALL RIGHTS RESERVED.	ALL DIMENSIONS IN MILLIMETERS UNLESS OTHERWISE STATED
DRAWN	SWH	SLF 25A RATED STREET LIGHTING CUT-OUT TYPE 2 (CNE) COMBINED NEUTRAL/ EARTH	Lucy
APPRV.	SWH		
DATE	15/03/04		
ORD.No		CUST.	02E0010009 ISS. 2

MATERIAL | FINISH | DO NOT SCALE IF IN DOUBT ASK | PROJECTION 1st ANGLE

02E0010009 ISS. 2 PRINT STATUS

NO PART OF THIS DRAWING MAY BE REPRODUCED OR TRANSMITTED IN ANY FORM OR BY ANY MEANS, ELECTRONIC OR MECHANICAL, INCLUDING PHOTOCOPYING, RECORDING, OR ANY INFORMATION STORAGE OR RETRIEVAL SYSTEM WITHOUT THE PRIOR PERMISSION OF W LUCY & CO., LTD

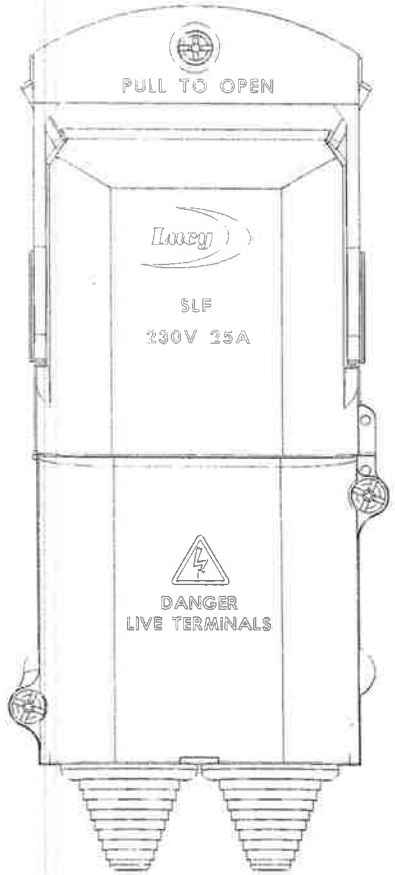

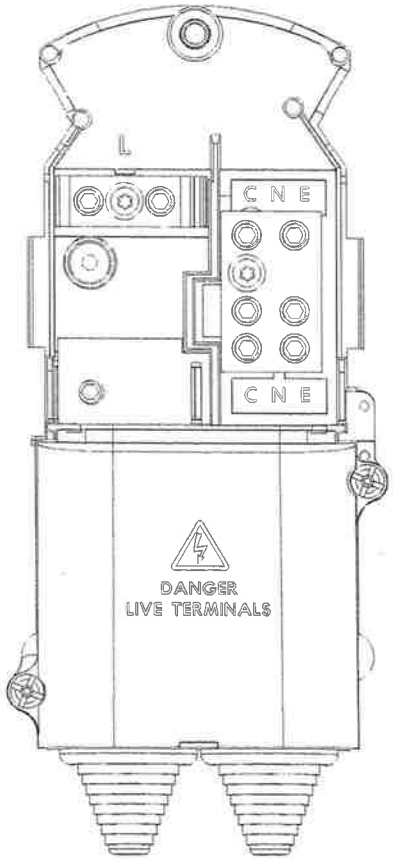

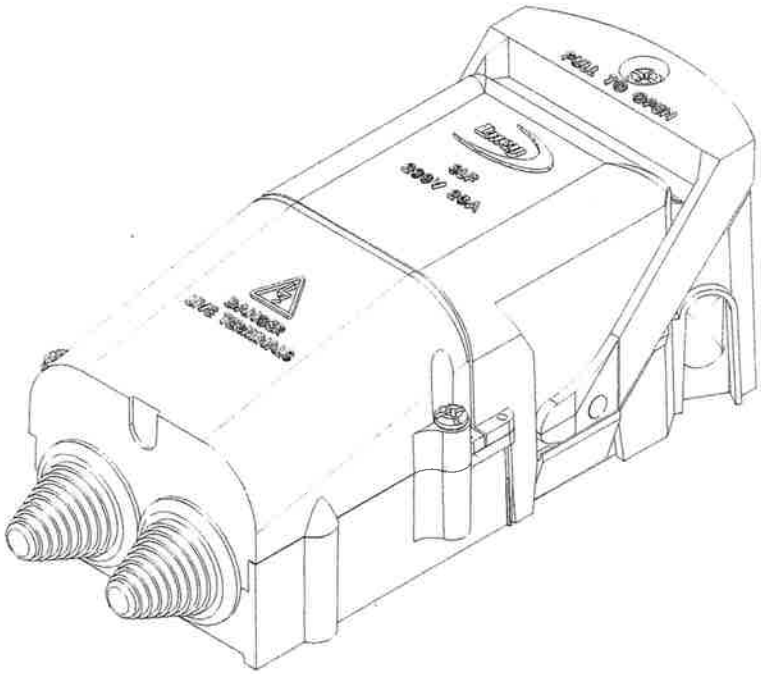

MOD.	NPB	ECR/ECN 812.UP DATED MODEL STRUCTURE & BOM	
APPRV.	SWH		
DATE	17/05/04		
STANDARD TOLERANCES: ISO 2768-m FOR ADDITIONAL INFO. SEE DRG. 72219		© COPYRIGHT W.LUCY & CO. LTD. ALL RIGHTS RESERVED.	ALL DIMENSIONS IN MILLIMETERS UNLESS OTHERWISE STATED
DRAWN	SWH	SLF 25A RATED STREET LIGHTING CUT-OUT TYPE 2 (CNE) WITH 3mm A/F HEX-DRIVE PINCH SCREWS	
APPRV.	SWH		
DATE	15/03/04		
ORD.NO		CUST.	0260012009 ISS. 2

MATERIAL: ---------- FINISH: DO NOT SCALE IF IN DOUBT ASK PROJECTION: 1st ANGLE

0260012009 ISS. 2 PRINT STATUS

NO PART OF THIS DRAWING MAY BE REPRODUCED OR TRANSMITTED IN ANY FORM OR BY ANY MEANS, ELECTRONIC OR MECHANICAL, INCLUDING PHOTOCOPYING, RECORDING, OR ANY INFORMATION STORAGE OR RETRIEVAL SYSTEM WITHOUT THE PRIOR PERMISSION OF W LUCY & CO., LTD

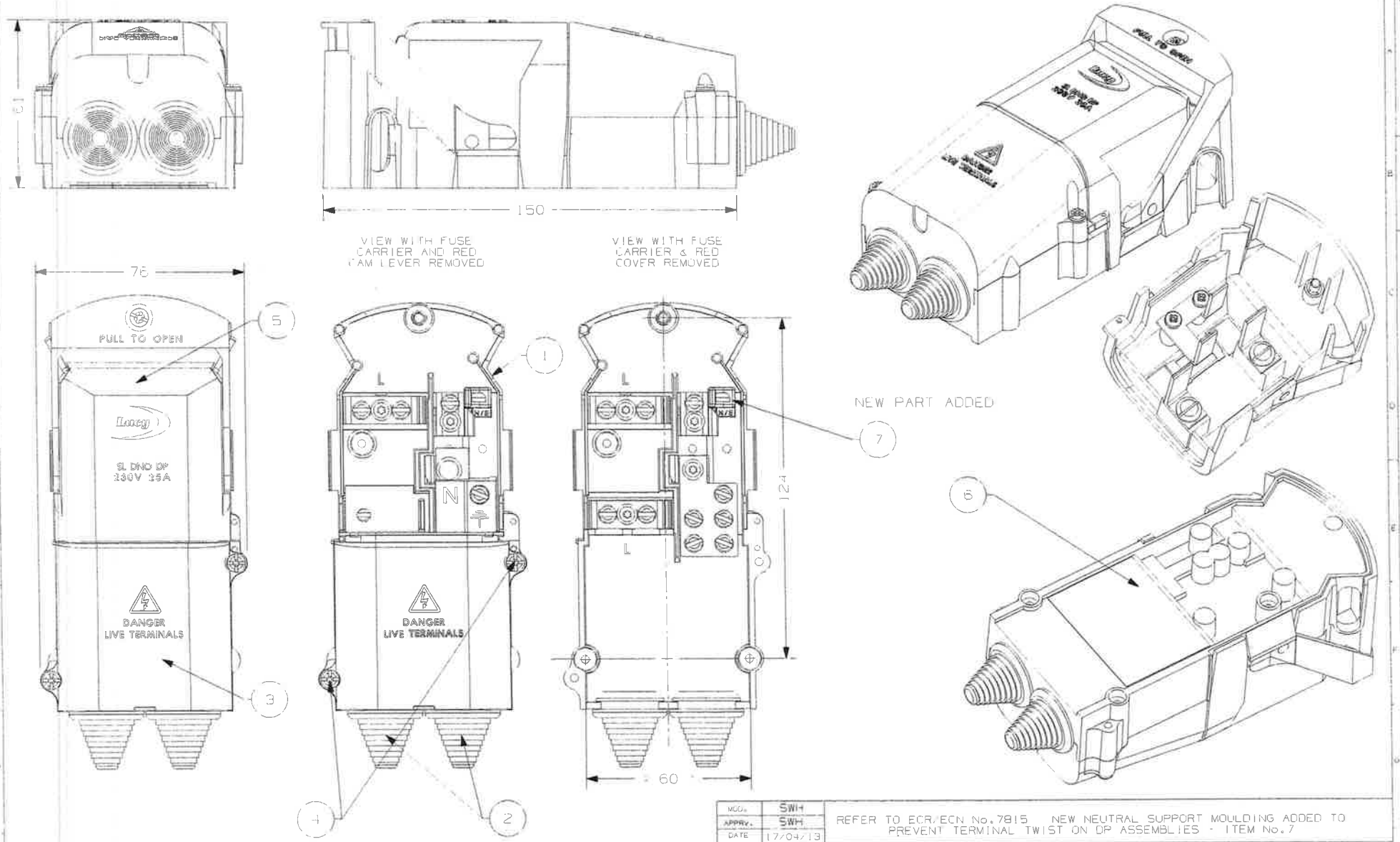

MOD.	SWH	REFER TO ECR/ECN No.7815 NEW NEUTRAL SUPPORT MOULDING ADDED TO PREVENT TERMINAL TWIST ON DP ASSEMBLIES - ITEM No.7
APPRV.	SWH	
DATE	17/04/13	
STANDARD TOLERANCES: ISO 2768 m. FOR ADDITIONAL INFO. SEE DRG. 72210		© COPYRIGHT W.LUCY & CO. LTD. ALL RIGHTS RESERVED. ALL DIMENSIONS IN MILLIMETERS UNLESS OTHERWISE STATED
DRAWN	MK	SL DNO DP 25A SLCO (CNE)
APPRV.	SWH	
DATE	07/03/05	
ORD.No		CUST.

MATERIAL: REFER TO BOM

FINISH: REFER TO BOM

DO NOT SCALE IF IN DOUBT ASK

PROJECTION 1st ANGLE

0260026007 ISS. 6

0260026007 ISS. 6 PRINT STATUS

NO PART OF THIS DRAWING MAY BE REPRODUCED OR TRANSMITTED IN ANY FORM OR BY ANY MEANS, ELECTRONIC OR MECHANICAL, INCLUDING PHOTOCOPYING, RECORDING, OR ANY INFORMATION STORAGE OR RETRIEVAL SYSTEM WITHOUT THE PRIOR PERMISSION OF W LUCY & CO., LTD

THM0001978 | ISS. 1 | PRINT STATUS

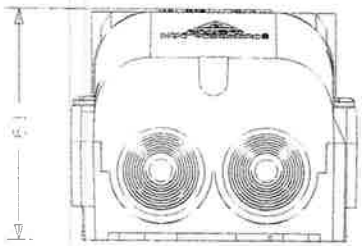

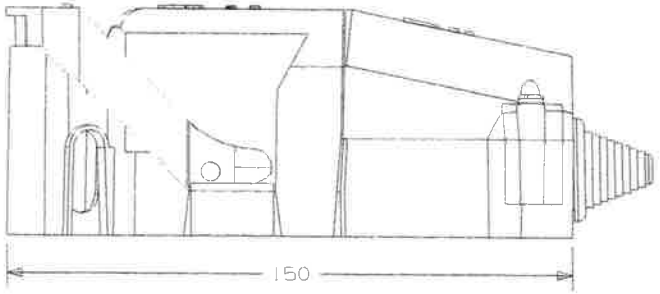

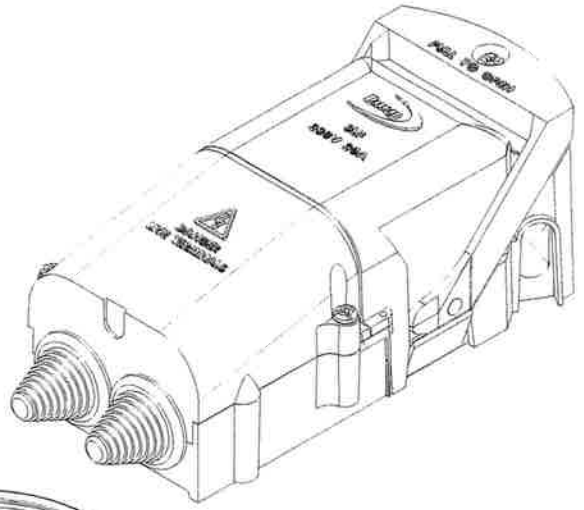

5 VIEW WITH FUSE CARRIER REMOVED

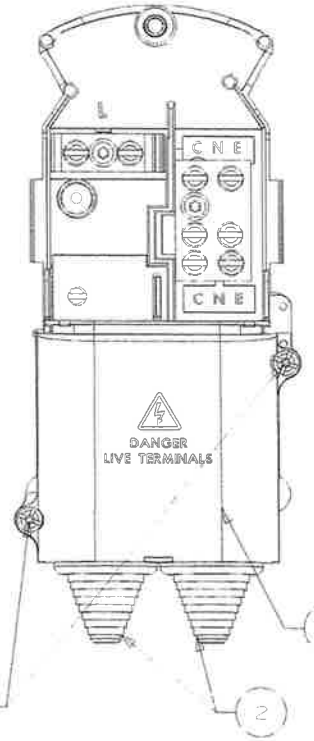

VIEW WITH FUSE CARRIER & RED COVER REMOVED

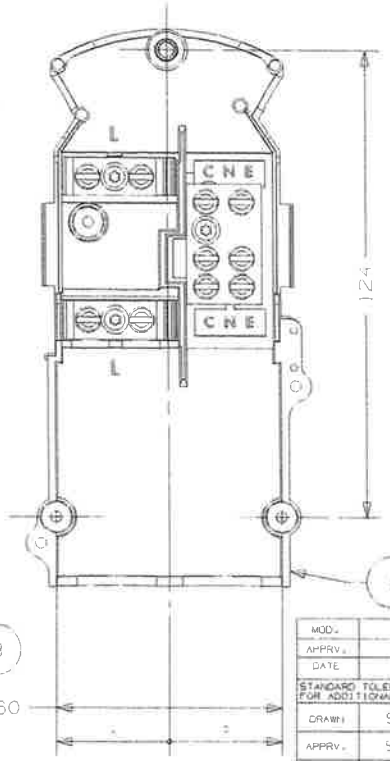

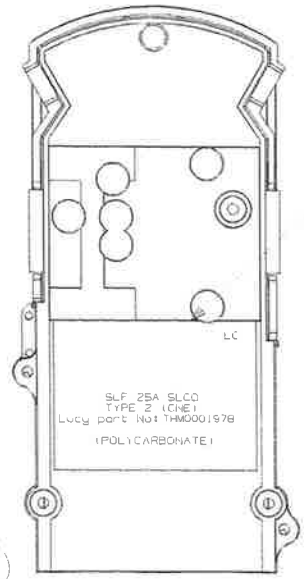

6

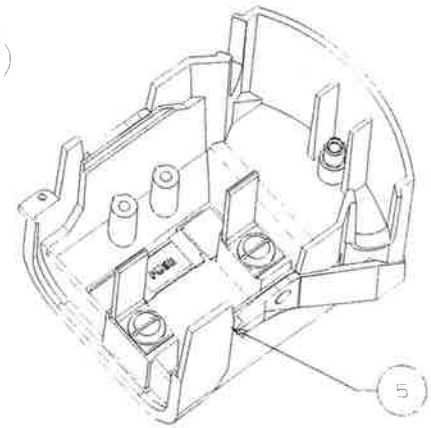

5

1

2

3

4

MOD.			
APPRV.			
DATE			

STANDARD TOLERANCES: ISO 2768 m
FOR ADDITIONAL INFO, SEE DRG. 72219

© COPYRIGHT W.LUCY & CO. LTD. ALL RIGHTS RESERVED.

ALL DIMENSIONS IN MILLIMETERS UNLESS OTHERWISE STATED

DRAWN	SWH
APPRV.	SWH
DATE	20-12-06
ORD. No	
CUST.	

SLF 25A SLCO TYPE 2 (CNE) POLYCARBONATE

THM0001978 | ISS. 1

MATERIAL

FINISH 00

DO NOT SCALE IF IN DOUBT ASK

PROJECTION 1st ANGLE

NO PART OF THIS DRAWING MAY BE REPRODUCED OR TRANSMITTED IN ANY FORM OR BY ANY MEANS, ELECTRONIC OR MECHANICAL, INCLUDING PHOTOCOPYING, RECORDING, OR ANY INFORMATION STORAGE OR RETRIEVAL SYSTEM WITHOUT THE PRIOR PERMISSION OF W.LUCY & CO., LTD.

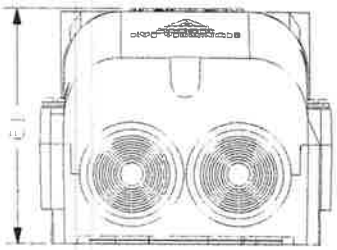

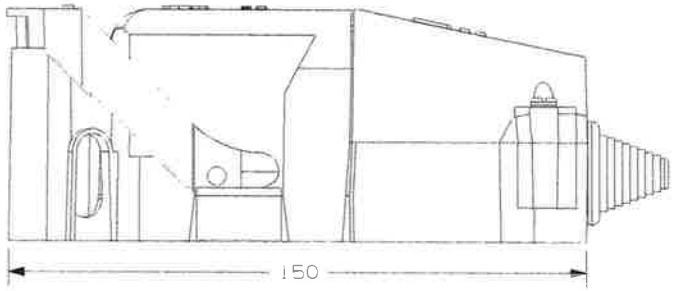

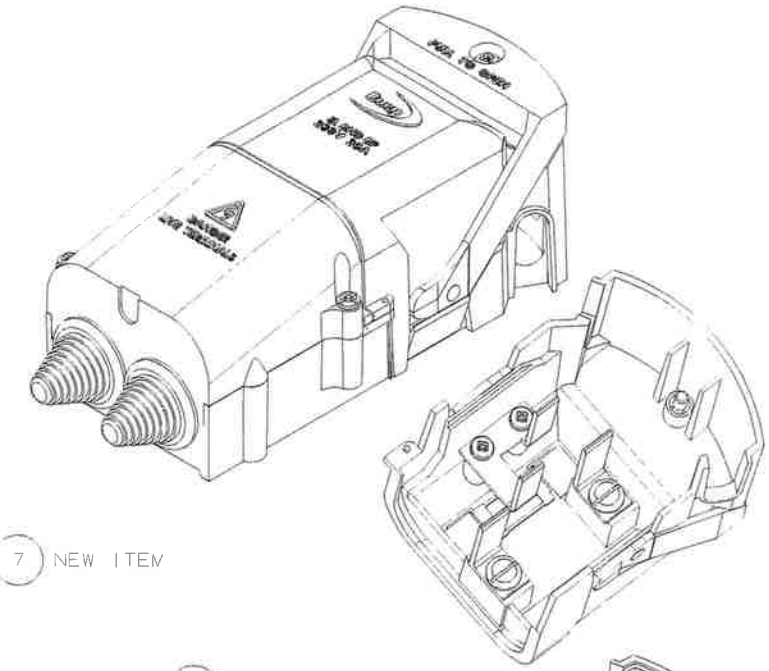

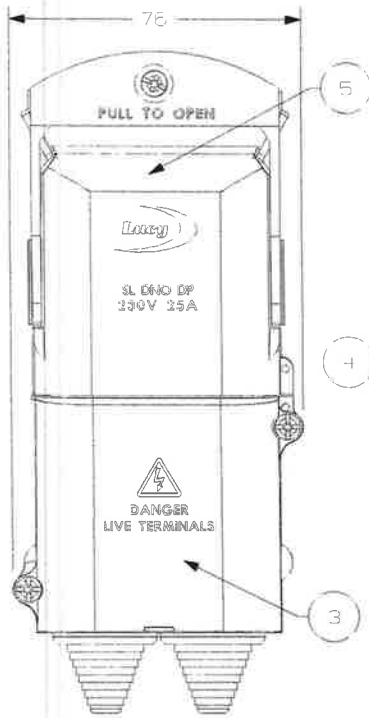

VIEW WITH FUSE CARRIER AND RED CAM LEVER REMOVED

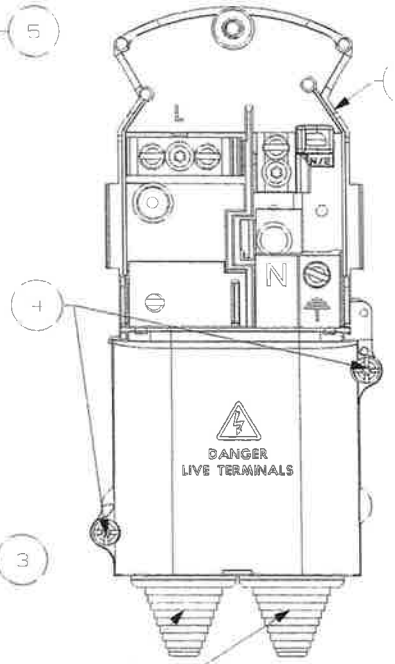

VIEW WITH FUSE CARRIER & RED COVER REMOVED

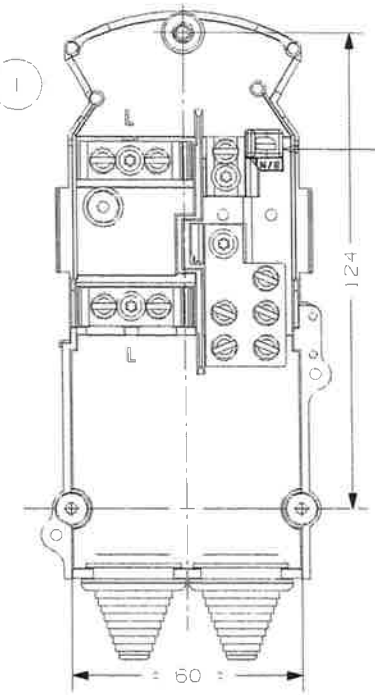

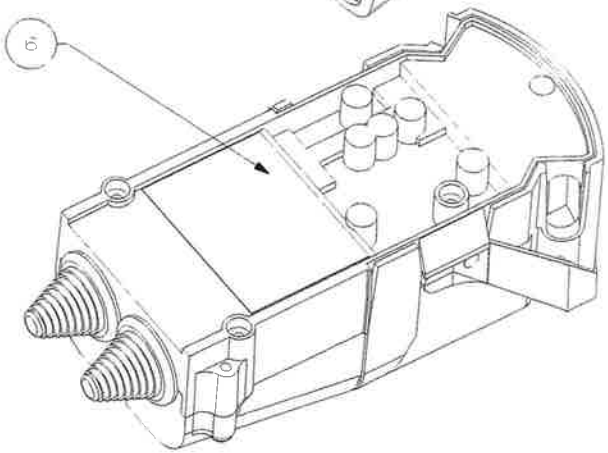

WDD.	SWH	REFER TO ECR/ECN No.7815 - NEW NEUTRAL SUPPORT MOULDING ADDED TO PREVENT TERMINAL TWIST ON DP ASSEMBLIES - ITEM No.7
APPRV.	SWH	
DATE	17/04/13	

STANDARD TOLERANCES: ISO 2768-m FOR ADDITIONAL INFO. SEE DRG. 72219

© COPYRIGHT W.LUCY & CO. LTD. ALL RIGHTS RESERVED.

ALL DIMENSIONS IN MILLIMETERS UNLESS OTHERWISE STATED

DRAWN	SWH
APPRV.	SWH
DATE	20/12/06
ORD.NO	
CUST.	

SL DNC DP 25A SLCO (CNE)
. POLYCARBONATE

Lucy

MATERIALS: REFER TO BOM

FINISH: REFER TO BOM

DO NOT SCALE IF IN DOUBT ASK

PROJECTION: 1st ANGLE

THM0001979 | ISS. 2

THM0001979 | ISS. 2 | PRINT STATUS

NO PART OF THIS DRAWING MAY BE REPRODUCED OR TRANSMITTED IN ANY FORM OR BY ANY MEANS, ELECTRONIC OR MECHANICAL, INCLUDING PHOTOCOPYING, RECORDING, OR ANY INFORMATION STORAGE OR RETRIEVAL SYSTEM WITHOUT THE PRIOR PERMISSION OF W LUCY & CO., LTD

THM00+1767 | ISS. 1 | PRINT STATUS

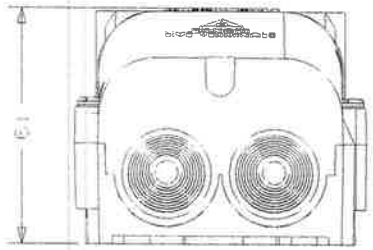

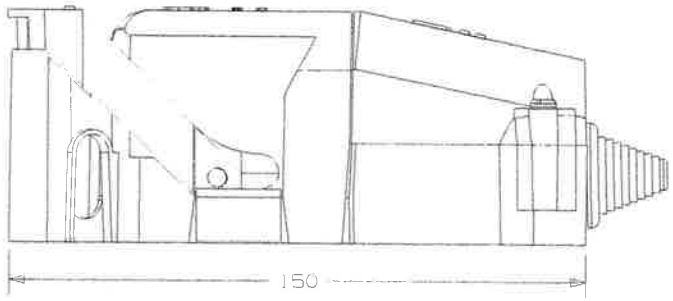

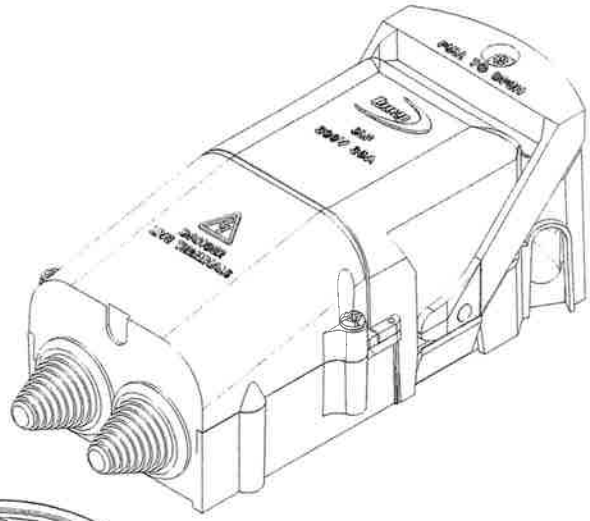

5 VIEW WITH FUSE CARRIER REMOVED

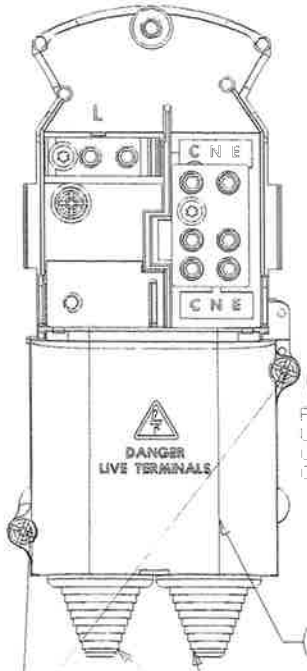

VIEW WITH FUSE CARRIER & CLEAR COVER REMOVED

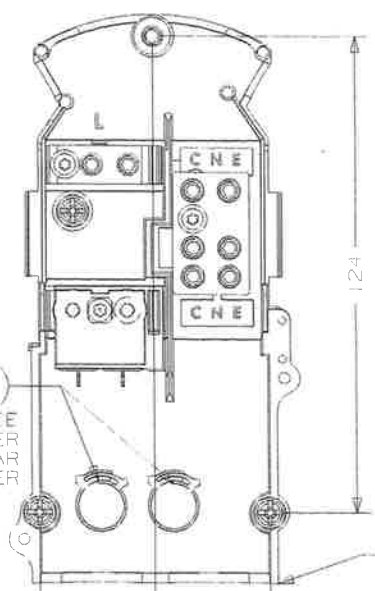

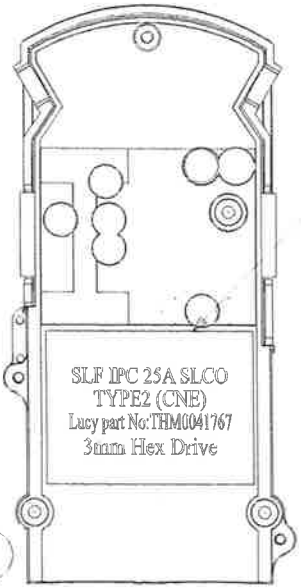

6

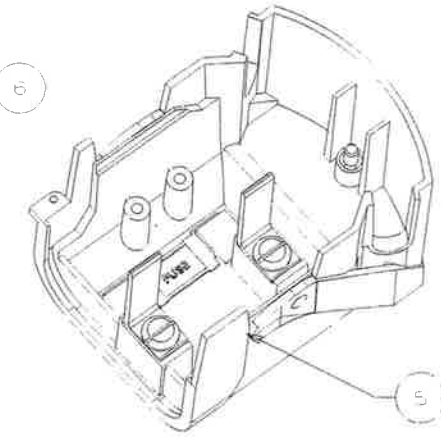

7 PLACE UNDER CLEAR COVER

60

MOD.	
APPRV.	
DATE	

STANDARD TOLERANCES: ISO 2768 m FOR ADDITIONAL INFO. SEE DRG. 72219

© COPYRIGHT W.LUCY & CO. LTD. ALL RIGHTS RESERVED.

ALL DIMENSIONS IN MILLIMETERS UNLESS OTHERWISE STATED

DRAWN	NPB
APPRV.	SWH
DATE	12/02/14
DRG.NO	

SLF2 IPC 25A SLCO TYPE 2(CNE) 3mm HEX DRIVE C/W CLEAR COVER

Lucy Electric

MATERIAL: REFER TO B.O.M. | FINISH: 00 | DO NOT SCALE FROM A3 IF IN DOUBT ASK | PROJECTION: 1st ANGLE | COST.

THM00+1767 | ISS. 1

NO PART OF THIS DRAWING MAY BE REPRODUCED OR TRANSMITTED IN ANY FORM OR BY ANY MEANS, ELECTRONIC OR MECHANICAL, INCLUDING PHOTOCOPYING, RECORDING, OR ANY INFORMATION STORAGE OR RETRIEVAL SYSTEM WITHOUT THE PRIOR PERMISSION OF W LUCY & CO., LTD

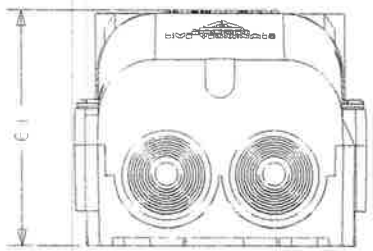

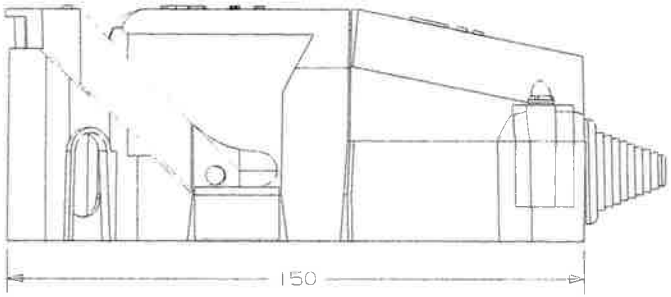

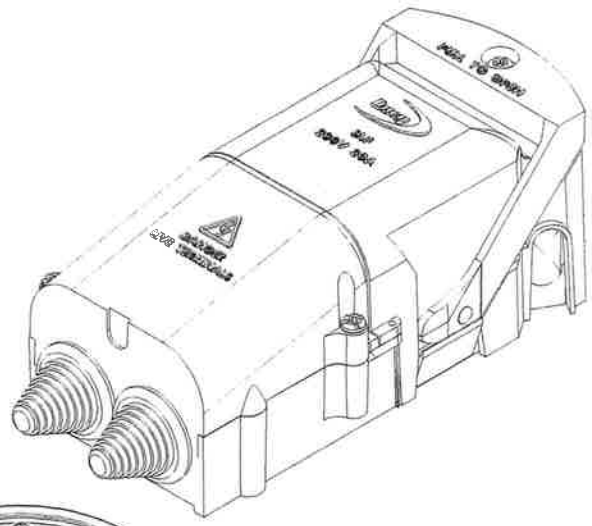

5 VIEW WITH FUSE CARRIER REMOVED

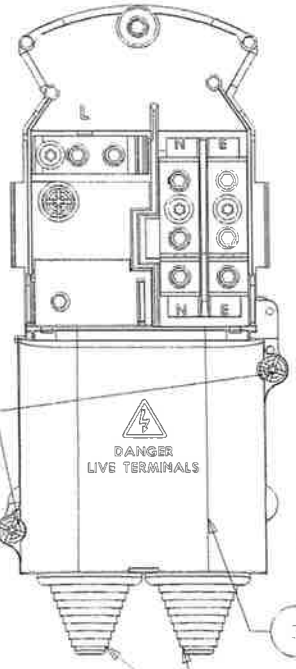

VIEW WITH FUSE CARRIER & CLEAR COVER REMOVED

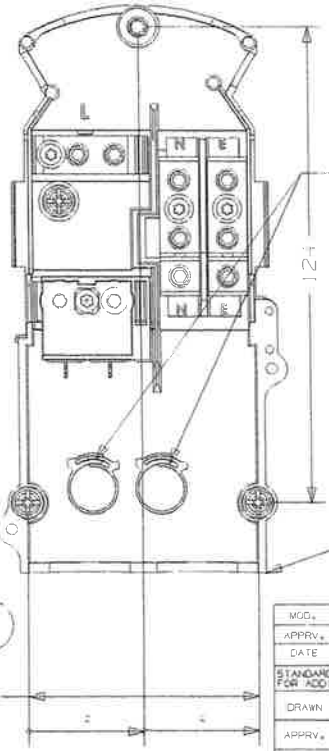

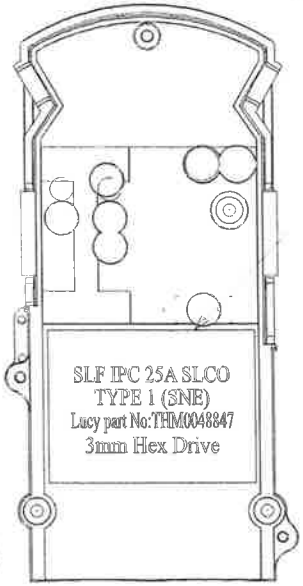

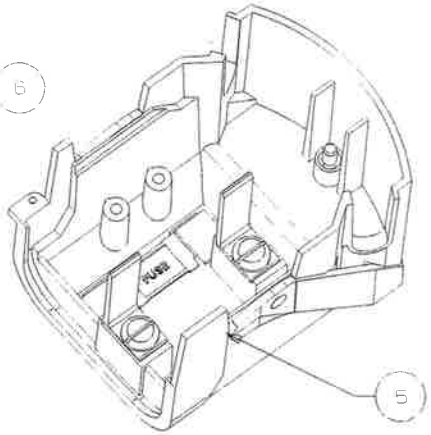

MOD.			
APPRV.			
DATE			

STANDARD TOLERANCES: ISO 2768 m FOR ADDITIONAL INFO. SEE DRG. 72210

© COPYRIGHT W.LUCY & CO. LTD. ALL RIGHTS RESERVED.

ALL DIMENSIONS IN MILLIMETERS UNLESS OTHERWISE STATED

DRAWN	NPB
APPRV.	SWH
DATE	14/01/15
ORD.No	
CUST.	

SLF2 IPC 25A SLCO TYPE 1 (SNE) 3mm HEX DRIVE C/W CLEAR COVER

Lucy Electric

MATERIAL:	FINISH:	DO NOT SCALE FROM A3 IF IN DOUBT ASK	PROJECTION	THM0048847	ISS. 1
REFER TO B.O.M.	00		1st ANGLE		

THM0048847 ISS. 1 PRINT STATUS